sideshift®

DOCK LIKE A PRO

HOUSEBOAT THRUSTER HB340/350 SERIES (PATENT PENDING)

INSTALLATION/OPERATION MANUAL

VOLUME 1.8, FEBRUARY 2017

Sideshift Inc. 130 Industrial Ave, Unit 303, Carleton Place, ON, Canada K7C 3T2
1.877.325.4787 **+613.686.6011** **INFO@SIDESHIFT.COM**

INTRODUCTION

Thank you for your purchase of a Sideshift thruster system.

Sideshift thrusters are designed for easy installation by anyone with basic mechanical and electrical skills.

This manual explains everything you need to know about installing your Sideshift thruster.

We also provide unlimited telephone support at 1.877.325.4787.

Also see our website for helpful installation videos at sideshift.com/choose-sideshift/videos/videos/.

This manual explains the mounting and operation of the HB340/HB350 Houseboat Thruster system. We recommend that you familiarize yourself with this complete manual before starting your installation.

Safety warnings

WARNING: **To prevent overheating when operating the Sideshift thruster, run for a maximum of 20-30 seconds at a time, then allow to cool for at least 10 seconds before further operation.**

WARNING: Ensure thruster battery switch is turned off when conducting maintenance and repair of the thruster.

WARNING: Use extreme caution when swimmers are in the area of the thruster. Turn off ignition and avoid contact with thruster props when boat is stationary.

WARNING: When operating out-of-water do not run thruster for longer than 5 seconds to prevent overheating.

WARNING: If conducting an in-water installation, use a cordless drill only, as a corded drill can present an electrocution hazard.

Required Tools

- Heat gun
- $^{3}/_{8}$" drive cordless driver
- 3/8" hex socket
- Wire stripper
- Wire crimper
- SAE wrench set 3/8" to 3/4"
- Pliers
- Drill bits up to ½"
- Caulking gun
- Marine sealant
- 1 ¼" and 2 ½" hole saw

Parts List

Item	Photo	Purpose
Single Wireless Joystick		Raise, lower and control thruster.
Dual Wireless Joystick		Controls bow and stern thruster on a single console for one-hand operation
Wireless Control Module		Wireless receiver and control interface between joystick and motor controller.

Motor Control Module		Relays commands from joystick, delivering high current from battery to motor.
Anti-seize		Prevents screw and bolt threads from seizing, facilitating easier assembly and disassembly.
Heat shrink tubes (sufficient for all cables attached to motor controller. Cut to size)		Provides waterproofing for cable at battery terminals.
Terminal protectors		Protects terminals from moisture and prevents shorts.

Compression terminals		Connects cables to motor controller. Select size according to wire gauge used.
Wireless Remote		Controls thruster remotely
Battery Switch		On/Off switch for thruster batteries
Fuse/Digital Voltage Indicator		Fuse protection and digital voltage monitor

INSTALLATION INSTRUCTIONS

Sideshift thrusters can be installed with the boat in water or on land, although land-based installation is easier.

Get an overview of the electrical installation procedures by viewing the installation videos for our PT230 Pontoon Thruster and our SS/ST series Bow and Stern thruster products on-line at sideshift.com/choose-sideshift/videos/videos/.

HB340/350 Bow Thruster Placement

The thruster is designed to be positioned on the underside bow of any pontoon-style or flat-bottom style houseboat. Position the unit centrally or off-center, and as far forward as possible for best performance.

Proper side clearance for good performance

The thruster mounting surface can be a maximum of 24” from the water. If the mounting surface is more than 24” above the water, a mounting bracket will need to be created to provide a lower mounting surface. See example below:

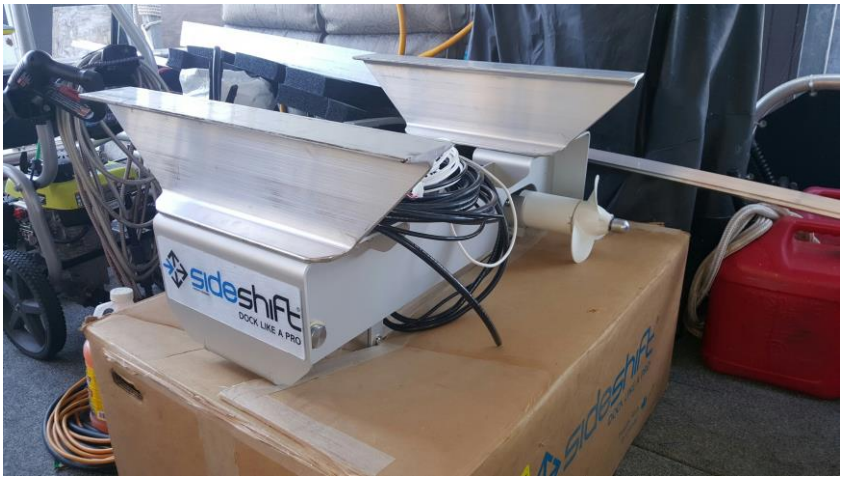

Step-By-Step Instructions:

STEP 1: DETERMINE A MOUNTING SURFACE WITH A MINIMUM OF ¼" ALUMINUM OR STEEL RIGID PLATING *OR* ATTACH RAILS TO FORM AN APPROPRIATE MOUNTING PLATFORM

The unit has pre-drilled mounting slots to accommodate 16" or 24" centers. In some installations it will be necessary to drill through the thruster mounting plate to fit centers other than 24", or to attach to mounting rails. Use a ¼" drill bit to drill the mounting plate.

NOTE:	You will require a helper for Step 2

STEP 2: POSITION THRUSTER AND ATTACH TO UNDERSIDE OF DECK

Using a helper, position the thruster in place, and using the supplied self—drilling/self-tapping 1 ¼" stainless hex-head mounting screws, apply a small amount of supplied Loctite to the threads and drive the screws into the mounting surface at the appropriate location. Pilot holes are not required. Two screws are required at the front and two at the back of the unit.

STEP 3: FEED THRUSTER CABLES THROUGH DECK AND CONNECT TO BATTERY SWITCH, FUSE AND MOTOR CONTROL MODULE(REFER TO SCHEMATICS ON PG 10/11)

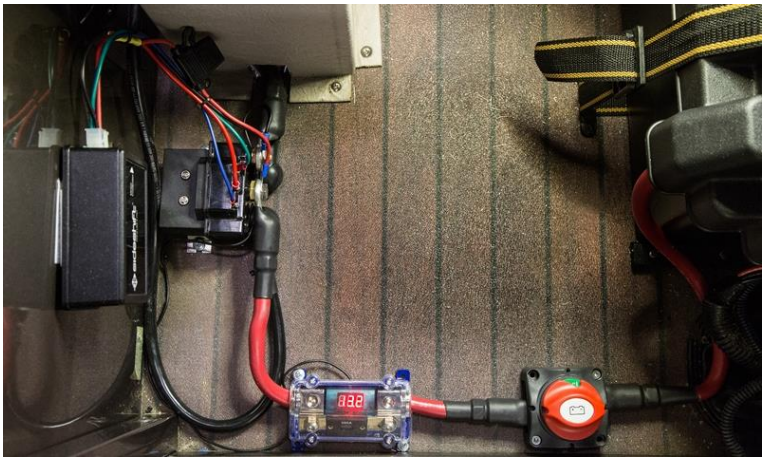

Determine a location for the motor control module and thruster batteries in a dry storage area close to the thruster.

Using a 1 ¼" hole saw, drill holes at appropriate locations for routing of the thruster cables.

Feed the thruster cables into the storage location.

Connect the motor control cables to a dedicated 12v(HB340) or 24v (HB350) battery bank(see page 11).

WARNING: Verify that hole placement will not interfere with or damage anything when drilling through the deck and storage location, and that there is sufficient space so that cables can be accessed after passing through the proposed hole location.

WARNING: Ensure the control module is located in a dry storage area

INSTALLATION INSTRUCTIONS – ELECTRICAL

Schematic – HB350 24V System

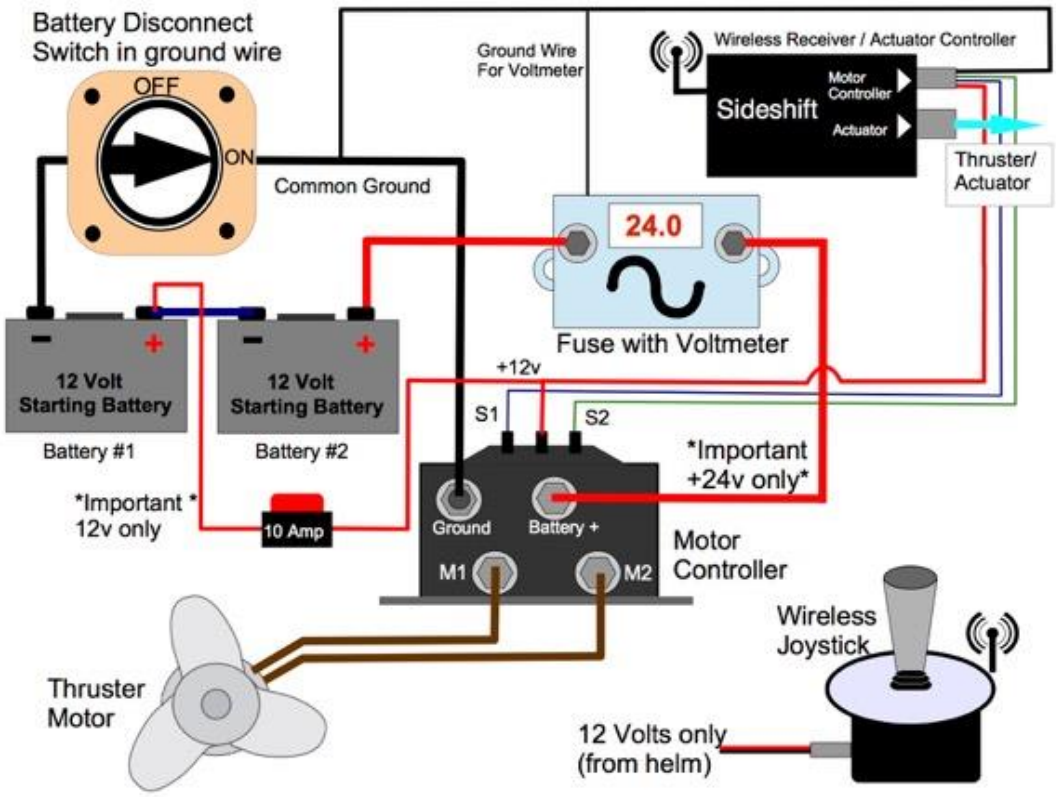

Schematic – HB340 12V System

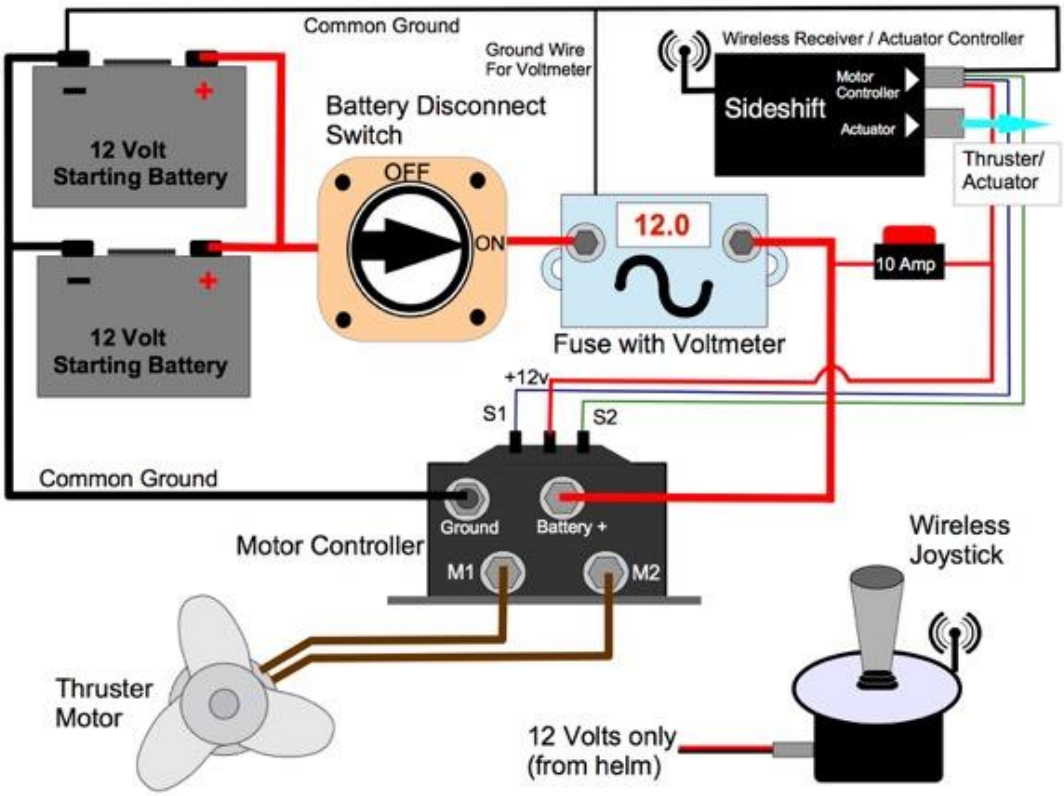

Due to the high current draw, Sideshift thrusters must be supplied with dedicated 12v starter-type batteries for each thruster.

WARNING:	High currents can result in reduced voltage supply to the thruster if improper cable, connectors and/or assembly procedures are used. This can result in poor performance or damage to the thruster motor.
WARNING:	Ensure the dedicated thruster batteries are fully charged and load tested. Low battery voltage can result in erratic actuator performance(actuator arm will not extend or retract properly) and poor thruster performance or damage to the thruster motor.

Battery Requirements

Starter type batteries(not deep cycle) are required for optimal performance. The batteries supplying the thruster must be capable of meeting the required CCA (Cold Crank Amps), as outlined in Table 1: Required Battery Characteristics. Insufficient battery capacity will lead to poor thruster performance.

Model	Qty	Voltage	Total CCA (A)
HB340	2	12 V	1700
HB350	2	24 V	850

Table 1: Required Battery Characteristics

Warning: **It is essential that the cold cranking ampere (CCA) requirements are met as outlined in the table above.**

Ensure batteries are load tested and properly charged at all times to avoid performance problems and thruster motor damage due to low voltage

Batteries must be installed as close to the motor controller as possible for optimum performance. If you are installing batteries in a non-ventilated area you will need to use AGM (absorbed glass mat) sealed batteries or sealed combination (starter/deep cycle) batteries. In ventilated areas, you can install flooded starting batteries or unsealed combination (starter/deep cycle) batteries.

BATTERY CAPACITY AND AGE

Under normal circumstances with new and fully charged batteries, you can expect around 50 thruster cycles before the battery must be recharged.

It is advisable to recharge batteries after each use if possible, to extend the life of the battery.

As batteries age and with repeated charge cycles, the battery slowly loses its ability to hold charge. The deeper the discharge before recharging, the shorter the life of the battery. Over time it will be able to supply fewer thruster cycles before it requires recharging and eventually will lack the capacity to allow proper thruster performance.

Capacity reduces to the point that performance is poor or few thrust cycles are available before recharging, and the batteries must be replaced.

BATTERY STORAGE

Over time, batteries self-discharge, even when disconnected. Some new batteries may have a self-discharge of 1-2% per month, but depending on the type and age of the battery, it can rise to 6% per month or more.

If the battery is coated with moist dirt and corrosion by-products, discharge rates can be even higher. Make sure the battery is clean and free of dirt and corrosion on and around the terminals.

If the battery is a flooded type, top up the electrolyte, ensuring that it is above the plates and below the vent cap well.

Fully charge the battery before storage, and store in a cool, dry place. Cooler batteries will self-discharge at a lower rate than warm batteries.

Check the terminal voltage of the battery periodically using the digital voltmeter located on the fuse holder. When the terminal voltage drops below 12.4 volts (75% capacity), charge it until fully charged. More frequent charging is preferred if convenient. It is recommended to charge the battery every three months.

Note that as charge capacity decreases, the freezing point of the electrolyte increases. This is important because the electrolyte must not be allowed to freeze. At 62% capacity, the freezing point is -26.5°C/-16°F; at 85% capacity, it is -52°C/-62°F.

CONNECTING BATTERIES IN PARALLEL TO BOOST CCA

You can double the CCA supplied from a single battery by connecting a second battery in parallel to the first. You may prefer this alternative to buying a larger single battery with the required CCA rating.

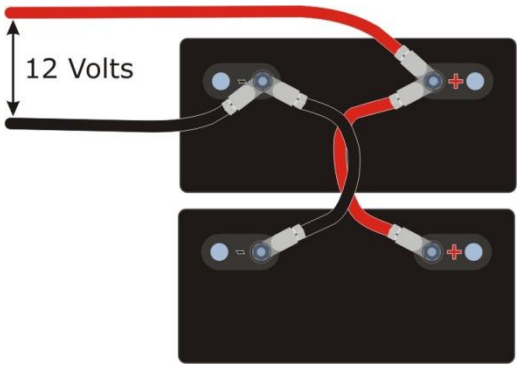

Figure 1: Two batteries in parallel, doubling CCA

If you use a parallel configuration, the two batteries must be identical: same rating and same manufacturer and ideally new batteries, or at least operated as a pair for their entire service life. Each battery must be charged separately before installing to ensure they start at the same charge level. Batteries which are dissimilar in any way may not charge and discharge equally, leaving one battery undercharged.

To connect two batteries in parallel, prepare two shunt cables of the same gauge used to connect the batteries to the motor controller. Connect the positive post of one battery to the positive post of the other and the negative post of one battery to the negative post of the other.

One post will share two compression terminals: the shunt and the cable to the motor controller.

24 VOLT BATTERIES

24 volt batteries are less common than 12 volt batteries. You may find it more convenient and less expensive to use two 12V batteries in series. If required, you can use four batteries, with two sets of series-connected batteries in parallel to supply the required CCA.

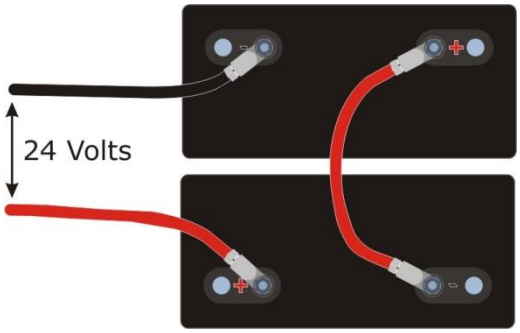

Figure 2: Two 12 V batteries in series, providing 24 V

To connect two batteries in series, connect the negative post of one battery to the positive post of another using a short piece of battery cable of the same gauge used to connect the batteries to the motor controller. The two remaining posts are each connected to the motor controller using two battery cables, supplying 24V.

PREPARING SHUNT CABLES

To prepare a shunt cable:

STEP 1: ARRANGE BATTERIES

You may choose to arrange batteries in different ways: side by side, end to end etc. For a parallel CCA-boasting configuration, arrange the two batteries so the positive and negative posts of each battery are on the same side as the other, as shown in Figure 1.

STEP 2: MEASURE CABLE

Cut cable or cables to length based on the battery arrangement chosen in Step 1 above.

You need one shunt cable for series configuration and two for parallel configuration, as explained in the Connecting Batteries in Parallel to Boost CCA and 24 Volt Batteries sections above.

STEP 3: INSTALL COMPRESSION TERMINALS

Slip shrink tube past both ends of each cable then attach compression terminals, as explained in How To Install Compression Terminals on page 19.

Slip shrink tube over shaft of compression terminal, leaving the ring exposed.

Apply heat evenly to the shrink tube until it forms a tight seal around the terminal and cable.

USE OF EXISTING BATTERIES

Existing batteries can be used for the thruster, but this option must be considered with caution. CCA requirements must be met, and you must consider how deeply the batteries will be discharged before charging can occur if the thruster load is added to the original load on the battery.

Deep Discharge Bank

If an existing bank of deep discharge batteries can supply the CCA requirements, this could be an option if they are located close enough to the thruster being powered. A battery at 40% capacity will supply about .8 volts less than a fully charged battery, which will reduce performance of your thruster.

Cable and Terminal Requirements

Due to the high current load drawn by the motors, it is essential that the correct type of cable and connectors are used, and that maximum cable length guidelines are observed according to the gauge and thruster model. These guidelines are summarized in the table below. The table assumes cables from the thruster to the controller have not been shortened.

Cable must be high quality tin coated copper, marine grade cable. Cable ends must be fitted with high grade cast copper, tin coated compression type terminals and sealed with double wall heat shrink tubing for moisture protection.

Cables from the motor are 4 AWG. This lighter gauge of cable is used to allow for easier routing between the motor and controller. It is essential that cable from battery to controller is much heavier gauge or the motor will not perform properly and could be damaged.

NOTE: SAE gauge can have up to 12% less conductor cross-section than AWG. Use cables of equal or greater AWG as suggested below.

Thruster	Length – 1/0 AWG	Max Length – 2/0 AWG
HB340		40′
HB350		50′

Correct cabling and connection practices are essential to maintaining correct operating voltage. Batteries must be fully charged before use.

Batteries are often subject to moisture and damp/corrosive conditions, therefore it is important that the connection terminals are properly sealed to the cables using heat shrink tubing (supplied).

Compression terminal sizes match the following applications:

1&2 AWG Thruster cables

2/0 AWG Battery cable (motor controller end)

Ideally, the positive cables should be red and the negative cables black.

NOTE:	If in doubt of which cable gauge to use, call Sideshift for technical advice.

CONNECTING BATTERIES AND THRUSTER TO MOTOR CONTROLLER

Instructions:

STEP 1: LOCATE THE MOTOR CONTROL MODULE AS CLOSE AS POSSIBLE TO THE THRUSTER

STEP 2: CUT BATTERY CABLE TO LENGTH

Cut two lengths of marine battery cable of suitable length to reach from batteries to controller. Note that one cable may need to be longer than the other to accommodate the location of the battery terminals.

STEP 3: CONNECT BATTERY TO MOTOR CONTROLLER

Fit terminal protectors over each battery lead at the controller end.

Choose a compression terminal to match the cable gauge (typically 2/0 for 340/350 series models).

Install compression terminals. See How To Install Compression Terminals on page 19 for instructions.

Attach positive cable to the "BATTERY POS" post on the motor controller. Slip battery protector over terminal.

Repeat steps for "BATTERY NEG" cable.

STEP 4: CONNECT BATTERIES

Fit battery protectors and then shrink tube over each battery lead at the battery end.

Install compression terminals. See How To Install Compression Terminals on page 19 for instructions.

Attach positive cable (connected to "BATTERY POS" post on motor controller) to the positive post of the battery. Slip battery protector over terminal.

Repeat steps for "BATTERY NEG" cable.

STEP 5: CONNECT THRUSTER TO MOTOR CONTROL MODULE

NOTE:	Motor power cable polarity is not identified. **If thrusters operate in opposite direction from joystick, reverse cable connections on motor controller.**

If thruster power cables are too long, cut them to length. Be sure that they are neatly routed, and comfortably reach the motor controller terminals. Leave some slack to make installation easier.

Install compression terminals. See How To Install Compression Terminals on page 19 for instructions.

Connect one cable to "MOTOR 1" and the other to "MOTOR 2".

How To Install Compression Terminals

STEP 1: STRIP 1" (2.5 CM) OF INSULATION FROM EACH END OF CABLES

NOTE:	Take care when stripping insulation to avoid damaging conductor. If some strands are removed the compression terminal will not make a good connection possibly resulting in performance reduction, a fire hazard or the cable pulling out of the compression terminal.

STEP 2: CHOOSE A COMPRESSION TERMINAL TO MATCH THE CABLE GAUGE

STEP 3: LOOSEN COMPRESSION TERMINAL NUT

STEP 4: PASS EXPOSED CONDUCTOR THROUGH NUT

STEP 5: TIGHTEN NUT WITH WRENCH

You will feel the resistance increase a bit as you tighten the nut, then become stiff, at which point the nut is sufficiently tight. Give the terminal a tug to make sure it is solidly attached to the cable.

STEP 6: INSTALL HEAT SHRINK TUBE

Slide shrink tube up the cable so that it covers the shaft of the terminal and the insulation of the cable.

Apply even heat to the shrink tube using heat gun until it makes a solid seal around the cable and terminal.

CONNECTING WIRELESS JOYSTICK AND ACTUATOR CONTROLS

Model HB350

Refer to HB350 schematic on page 10 for complete system layout

1. Position the wireless control module in a dry location near the motor control module.
2. Connect the red(Positive) and black(Ground) leads from the 4 pin motor control cable to the "12v Positive" and "Common Ground" terminals on the battery bank.

   Caution: DO NOT connect red and black leads directly to motor control module or damage to wireless control module will occur.
3. Connect "24v positive" and "Common Ground" terminals on the battery to "battery neg" and "battery pos" on the motor control module.
4. Connect the green and blue leads from the 4 pin motor control cable to "switch 1" and "switch 2" on the motor control module.
5. Plug the 4 pin motor control cable into the black wireless control module.
6. Plug the 6 pin actuator cable into the black wireless control module.

NOTE:	The joystick and wireless key fob are preprogrammed for operation. No pairing or programming is required.

Model HB340

Refer to HB340 schematic on page 11 for complete system layout

1. Position the control module in a dry location near the motor control module.
2. Connect the red(Positive) and black(Ground) leads from the 4 pin motor control cable to the "12v Positive" and "Common Ground" terminals on the battery bank.
3. Connect "Common Ground" and "battery pos" on the battery to "battery neg" and "battery pos" on the motor control module.
4. Connect the green and blue leads from the 4 pin motor control cable to "switch 1" and "switch 2" on the motor control module.
5. Plug the 4 pin motor control cable into the black wireless control module.
6. Plug the 6 pin actuator cable into the black wireless control module.

NOTE:	The joystick and wireless key fob are preprogrammed for operation. No pairing or programming is required.

Installing Joystick on Console

1. Locate a position on the console of the boat suitable for the joystick. Check under the selected position on the console to ensure a minimum area of at least 4” diameter and a minimum three inches obstruction-free below the area of the joystick equipment.
2. Peel the backing and place the supplied template in the chosen location.
3. Using a 3/16” bit, drill a hole at the center of the template, marked by the cross-hairs.
4. Using a 2.5” hole saw and the pilot hole drilled in Step 3 above, drill a hole at the center of the template.
5. Remove the template.
6. Connect the red and black leads from the joystick power cable to a direct 12v source under the helm.

Note: Do not connect the joystick cable through an accessory or other type of switch.

7. Plug the power cable into the back of the joystick
8. Run a thin bead of marine sealant in the groove around the underside perimeter of the joystick, insert into the 2 ½" cutout and press in place. Use a sharp knife or razor to trim any excess sealant.

OPERATING THE THRUSTER

WARNING: The thruster is equipped with an overload protection circuit. Should the thruster encounter an obstruction when being retracted or deployed, the unit will shut down and a continuous alarm will sound. You must turn power off and then power back on to the joystick and to the thruster battery switch, which will reset the unit. Clear any obstruction under the boat and proceed normally.

WARNING: Deploy and operate the thruster only when the boat is at slow speed or stopped. Never deploy the thruster when the boat is at speed as this may enable the overload protection circuit(see above warning) or damage the unit.

WARNING: Ensure the area under the boat is clear when operating the thruster and that there are no swimmers in the area.

1. Turn power on to the joystick by holding the power button for 1 second. A beep will sound and the blue joystick light will activate.
2. To lower the thruster, press and release the down button on the joystick console. A fast beep will sound during deployment, and a slow beep will sound once the thruster is in the fully down position and ready for use.
3. Use the thruster in short bursts as required. <u>Do not run for more than 20-30 seconds at a time.</u>
4. To retract the thruster push the up button on the joystick console. A fast beep will sound. When the unit is fully retracted the joystick will automatically power off.
5. The joystick will automatically power-off after 5 minutes of non-use.

WARNING Retract the thruster only when the boat is completely stopped

OPERATING THE WIRELESS REMOTE

1. For operation of the wireless key fob the joystick must be turned on and the thruster in the fully down position.
2. Push the top left or right buttons as required to operate the bow thruster.
3. Push the bottom left or right buttons to operate the stern thruster(if applicable).
4. The wireless key fob will automatically power-off after 5 seconds to preserve battery life.
5. A flashing green light indicates low battery. No green light indicates a dead battery.
6. To replace the battery remove the 4 screws, open the case carefully, and insert a new CR2032 coin cell battery.

OPERATION AND FAULT MODES

Operation	Action	Features
Power on thruster	Press and hold joystick power button for 1 second	• Short beep and solid blue light to confirm power • Auto power-off after 5 min of non-use
Lower thruster	Push and release actuator down button on joystick console	• Fast beep during deployment • Slow beep when fully extended
Raise thruster	Push and release actuator up button on joystick console	• Fast beep when thruster retracts • System will power-off automatically

KEY FOB OPERATION

Mode	Action	Features
Power on	• Thruster must be in extended position before using key fob • Press left or right arrows to operate thruster as required	• Solid green light when power on • Auto power-off after 5 seconds • Flashing green – Low Battery • No light – Dead battery **Replace with CR2032 Coin battery**

MAINTENANCE

Sideshift thrusters are designed for long life, provided proper maintenance procedures are followed.

WARNING: When working near or on the Sideshift thruster, always switch the thruster battery switch to "off".

Motor Unit

The motor is sealed and requires no maintenance.

Battery

Ensure batteries are always fully charged. **Check voltage using the supplied voltmeter located on the fuse holder**. Unlike other battery technologies such as NiCad, batteries should be lightly cycled. Avoid discharging beyond 75% capacity and even less if possible. To verify charge, measure the terminal voltage of the battery with **no load**, and refer to the chart below to determine the health of your battery:

Voltage	Specific Gravity	Approximate Charge*
>14.4		Over-charging**
>13.38		Charging
12.62	1.265	100%
12.54	1.251	90%
12.45	1.236	80%
12.4	1.225	75% ***
12.27	1.206	60%
12.18	1.19	50%
11.97	1.155	25%
11.76	1.12	0%

Table 2: Terminal voltage vs. battery capacity

Note *	It can take 2 hours after charging for the terminal voltage to properly reflect the charge level.
Note **	Over-charging can damage the battery and cause hydrogen gas to form which is an explosion hazard and can lead to serious injury and fire.
Note ***	Avoid discharging beyond 75% to avoid premature battery failure.

WARRANTY

2 Year Warranty

Register your warranty at https://sideshift.com/register-warranty/

All Sideshift Inc. products are warrantied to be free from defects due to faulty workmanship or defective materials for a period of two years. Products failing within the warranty period should be returned to Sideshift assembled and complete with a copy of the original invoice.

Return requests must be made directly to Sideshift. The request should include an itemized list of material, stating the reason for the requested return. Upon approval Sideshift will assign a Return Merchandise Authorization Number which must be placed on the return shipping container. Delivery of returned merchandise will be refused and credit will not be issued without written authorization and shipping instructions from Sideshift.

Sideshift Inc. will not be responsible for accidental damage or expense caused by the following conditions:

- Damage due to improper installation
- Improper wire size or low voltage conditions
- Burn-out due to overloading motor or related damage
- Tampering with or altering the motor before, during or after installation
- Damage due to collision of any kind
- Damage due to entanglement of foreign objects such as fishing line and netting material
- Warranty does not cover paint damage, dents, nicks and normal wear and tear of the product following delivery and installation.

Specifications

HB340/350 Houseboat Thruster

Parameter	**HB340**
Power (HP)	5
Voltage (VDC)	12
Start Current (A)	500
Housing Length (in)	34.0
Thruster Arm Length (in)	35.0
Housing Width (in)	12.0
Propellers (in)	8.0
Recommended boat size (ft.)	<50.0
Actuator deployment/retraction time (sec.)	6.0

Parameter	**HB350**
Power (HP)	7.5
Voltage (VDC)	24
Start Current (A)	400
Housing Length (in)	34.0
Thruster Arm Length (in)	35.0
Housing Width (in)	12.0
Propellers (in)	8.0
Recommended boat size (ft.)	<70.0
Actuator deployment/retraction time (sec.)	6.0

Sideshift Inc.
130 Industrial Ave, Unit 303
Carleton Place, ON, Canada K7C 3T2

Toll free. 1.877.325.4787
Tel. +1.613.686.6011
Fax. +1.613.225.9599
www.sideshift.com